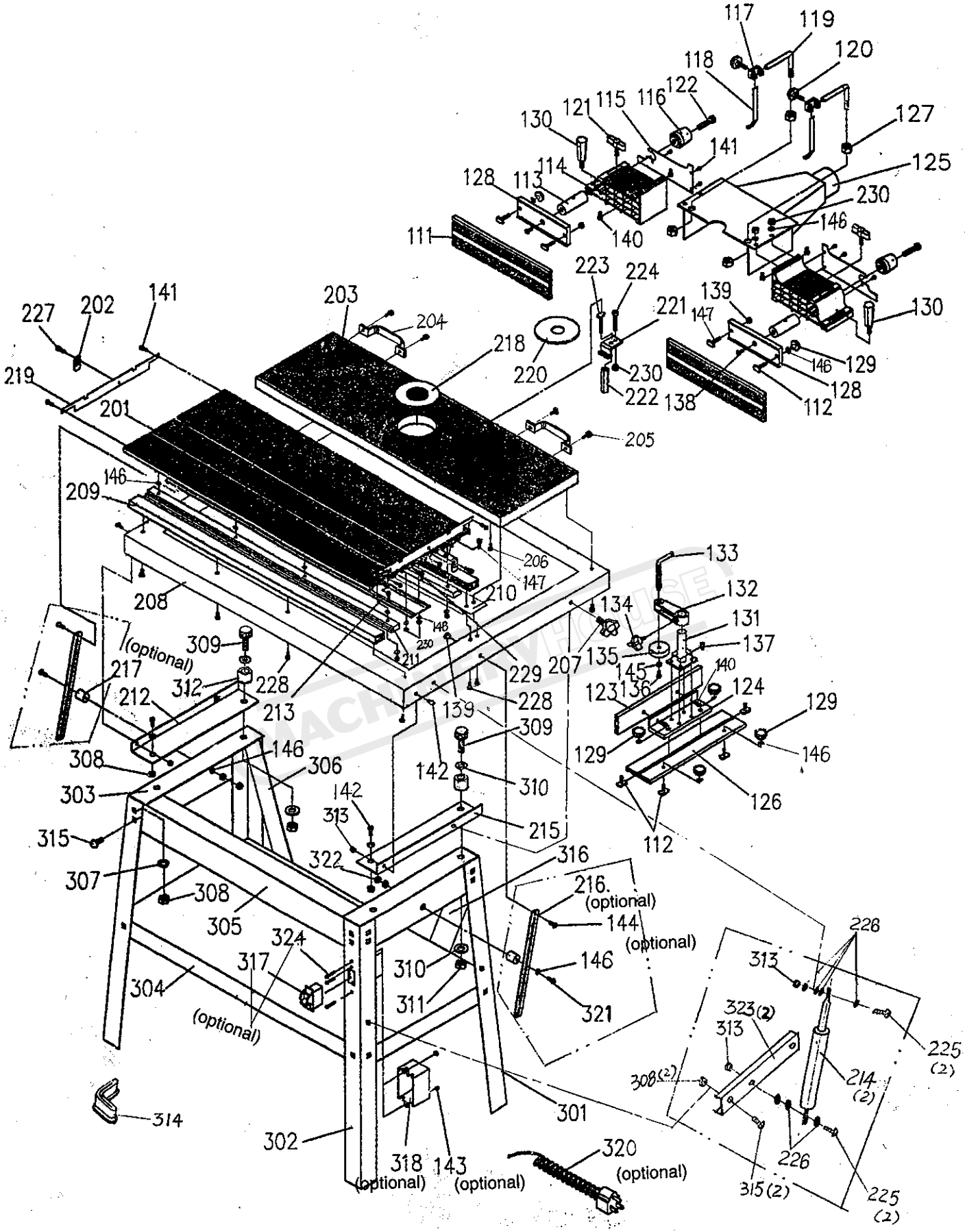
117
119
120
118
122
121
115
116
130
127
141
125
128
113
114
230
146
111
140
223
224
139
221
147
130
227
202
141
203
204
218
220
230
146
129
128
219
222
138
112
201
205
146
209
206
147
133
210
132
208
134
131
146
137
309
(optional)
211
230
135
217
312
228
229
207
145
140
212
213
228
123
136
124
139
309
129
308
146
306
142
310
129
146
303
142
313
215
126
315
322
112
316
307
308
216.
(optional)
305
144
(optional)
324
146
317
310
311
321
304
(optional)
226
313
323(2)
313
225
(2)
308(2)
214
(2)
314
301
302
318
143
320
(optional)
(optional)
(optional)
226
315(2)
225
(2)

PARTS LIST

Part No.	Description	Qty
111	Fence half	2
112	Sliding screw m6×20	6
113	Micrometric adjustment rod	2
114	Fence body	2
115	Fence body guard	2
116	Micrometric adjustment rod	2
117	Hold-down holder	2
118	Hold-down	2
119	Lbar	2
120	Knob m8×16	2
121	Wing screw m10×20	2
122	Hexagonal socket head screw m10x45	2
123	Fence plate	1
124	Clamp holder	1
125	Dust hood	1
126	Short fence	1
127	Nut m12	4
128	Clamp plate	2
129	Knob nut m6	6
130	Heavy handle	2
131	Clamp bracket	1
132	Bracket	1
133	Clamp rod	1
134	Knob m6×20	1
135	Clamp plate	1
136	Round cross head screw m5×10	1
137	Hexagonel socket head screw m6×12	4
138	Hexagonal screw m10×16	2
139	Anti-loose nut m6	4
140	Hexagonal screw m6×12	6
141	Round cross head screw m5×12	26
142	Hexagonal screw m8×25	4
143	Nut m5	8
144	Hexagonal screw m6×20	2
145	Washer5	1
146	Washer6	50
147	Hexagonal screw m6×25	10
201	Sliding table	1
202	Upper plate	2
203	Fixed table	1
204	Arched handle	2
205	Hexagonal socket head screw m6×20	4
206	Hexagonal screw m8×20	4
207	Knob screw m8×30	2
208	Frame	1
209	Slide way	2
210	Middle bracket	1

Part No.	Description	Qty
211	Slide rail	2
212	Table right support	1
213	Fix piece	2
214	Damper	2
215	Table left support	1
216	45°positioning piece(optional)	2
217	Positioning piece(optional)	2
218	60mm insert plate	1
219	Guard	2
220	29mm Insert plate	1
221	Motor clamp piece	4
222	Hexagonal clamp shaft	4
223	Sliding screw m6×50	4
224	Hexagonal screw m6×25	4
225	Hexagonal screw m8×30	4
226	Thick washer8	16
227	Hexagonal screw m6×12	2
228	Round cross head screw m5×10	8
229	Hexagonal screw m6×12	16
230	Nut m6	32
301	Floor stand	3
302	Front stand(fitted with switch)	1
303	Upper angle plate	2
304	Middle plate	1
305	Front upper angle plate	1
306	Right bracket	1
307	Washer 8	28
308	Nut m8	30
309	Hexagonal socket head screw m8x40	2
310	Washer8	4
311	Nut m8	2
312	Pad	2
313	Anti-loose nut m8	6
314	Rubber leg	4
315	Screw m8×12	28
316	Left bracket	1
317	Switch(optional)	1
318	Switch box(optional)	1
320	Power wire(optional)	1
321	Round cross head screw m6×40	2
322	Nut m6	4
323	Damper support	2
324	Round cross head screw m5×40	2